SAKAI Miniature Compensation Coupling UA-C

Allowable Parallel Misalignment: 0.2mm
Allowable Angular Misalignment: 1°
Maximum Speed: 6000r/min

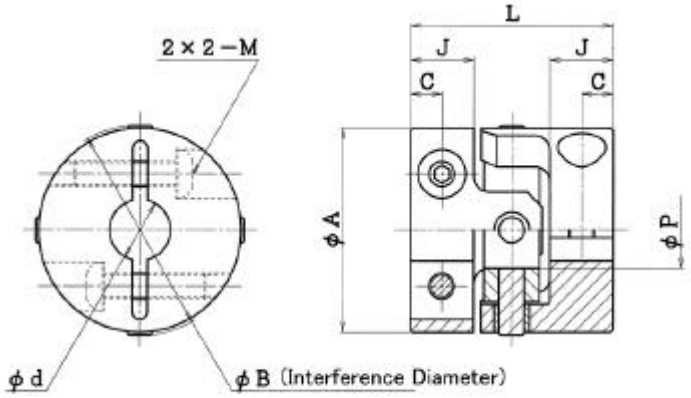

■Performance Rating and Dimension Specification

(Unit: mm)

Model Number	Allowable Torque (N·m)	Maximum Torque (N·m)	Allowable Thrust Load (N)	Torsional Rigidity (N·m/rad)	Moment of Inertia (kg·m²)	Weight (g)	d	A	B	P	L	J	C	M
UA-15C	0.25	0.5	30	0.29×10^{3}	0.24×10^{-6}	8	3～5	15	16	4	18	6	3	M2.5
UA-20C	0.5	1.0	60	0.67×10^{3}	0.86×10^{-6}	16	4～8	20	22	7	20	7	3.5	M3
UA-25C	1.0	2.0	80	1.50×10^{3}	2.90×10^{-6}	34	5～10	25	27	10	27	9	4.5	M4
UA-30C	2.0	4.0	140	3.78×10^{3}	6.03×10^{-6}	47	6～14	30	32	10	30	9.5	4.7	M4
UA-35C	3.5	7.0	180	6.34×10^{3}	13.4×10^{-6}	81	8～16	35	37	13	35	11.5	5.7	M5
UA-40C	5.0	10	320	10.6×10^{3}	26.1×10^{-6}	117	8～20	40	42	15	40	12.5	6.2	M5

■Bore Size: d (Tolerance H7)

(Unit: mm)

Model Number	D															
	3	4	5	6	6.35	7	8	9.525	10	11	12	14	15	16	19	20
UA-15C	●	○	○													
UA-20C		●	●	●		○	○									
UA-25C			●	●	●	●	●	○	○							
UA-30C				●		●	●		○	○	○	○				
UA-35C							●		●	●	●	○	○	○		
UA-40C							●		●	●	●	●	○	○	○	○

☐The allowable torque listed above represents torque at the rotation speed of 1500r/min.
☐Moment of inertia and weight listed above are for maximum bore sizes.
☐Maximum torque is applied torque at start and stop of rotation.
☐Bore size marked ● indicates shafts can be insert beyond the ends of the hub's surface since the shaft size is within the diameter of the shaft through hole of the center block.
☐Bore size marked ○ indicates shafts should not be inserted beyond the ends of the hub's surface to avoid the shafts from colliding with the center block in rotation.
☐Allowable thrust load listed above represents the load in no applied torque.
☐Recommended shaft tolerance is h_6.
☐Arrange coupling hole's diameter larger than φB (Interference Diameter) to avoid the collision between coupling hole and center block's pins.

Specifications & Dimensions

■Ordering Example

UA－20C－4×6

- Bore Sizes: φ4×6mm
- Bolt Clumping Type
- Overall Diameter: φ20mm

■Clumping Capacity

Model Number	Bore Size (mm)	Clumping Capacity (N•m)	Model Number	Bore Size (mm)	Clumping Capacity (N•m)	Model Number	Bore Size (mm)	Clumping Capacity (N•m)	Model Number	Bore Size (mm)	Clumping Capacity (N•m)
UA-15C	3	0.6	UA-25C	6.35	4.6	UA-30C	12	8.6	UA-40C	8	11.3
	4	0.8		7	5.1		14	10.1		10	14.1
	5	1.0		8	5.8	UA-35C	8	11.3		11	15.5
UA-20C	4	1.4		9.525	6.9		10	14.1		12	16.9
	5	1.7		10	7.3		11	15.5		14	19.7
	6	2.0	UA-30C	6	4.3		12	16.9		15	21.1
	7	2.4		7	5.1		14	19.7		16	22.5
	8	2.7		8	5.8		15	21.1		19	26.8
UA-25C	5	3.6		10	7.3		16	22.5		20	28.1
	6	4.3		11	7.9						

■Attachment on Shaft

Model Number	Bore Size (mm)	Clump Bolt Size	Fasten Torque (N•m)
UA-15C	3～ 5	M2.5	0.8
UA-20C	4～ 8	M3	1.4
UA-25C	5～10	M4	2.8
UA-30C	6～14	M4	2.8
UA-35C	8～16	M5	5.9
UA-40C	8～20	M5	5.9

□Insert the shaft into the coupling to the certain position by hand. Then, tighten four clumping bolts by torque lench at fasten torque which is mentioned in the above table.

□Confirm shaft diameter with the bore size table whether the shaft can pass the center block's shaft through hole or not.

□In case that the shaft diameter is larger than the diameter of the shaft through hole of the center block (Confirm the ● and ○ mark of the bore size table), the insert position of the shaft should be within the size J in the dimension specification table.